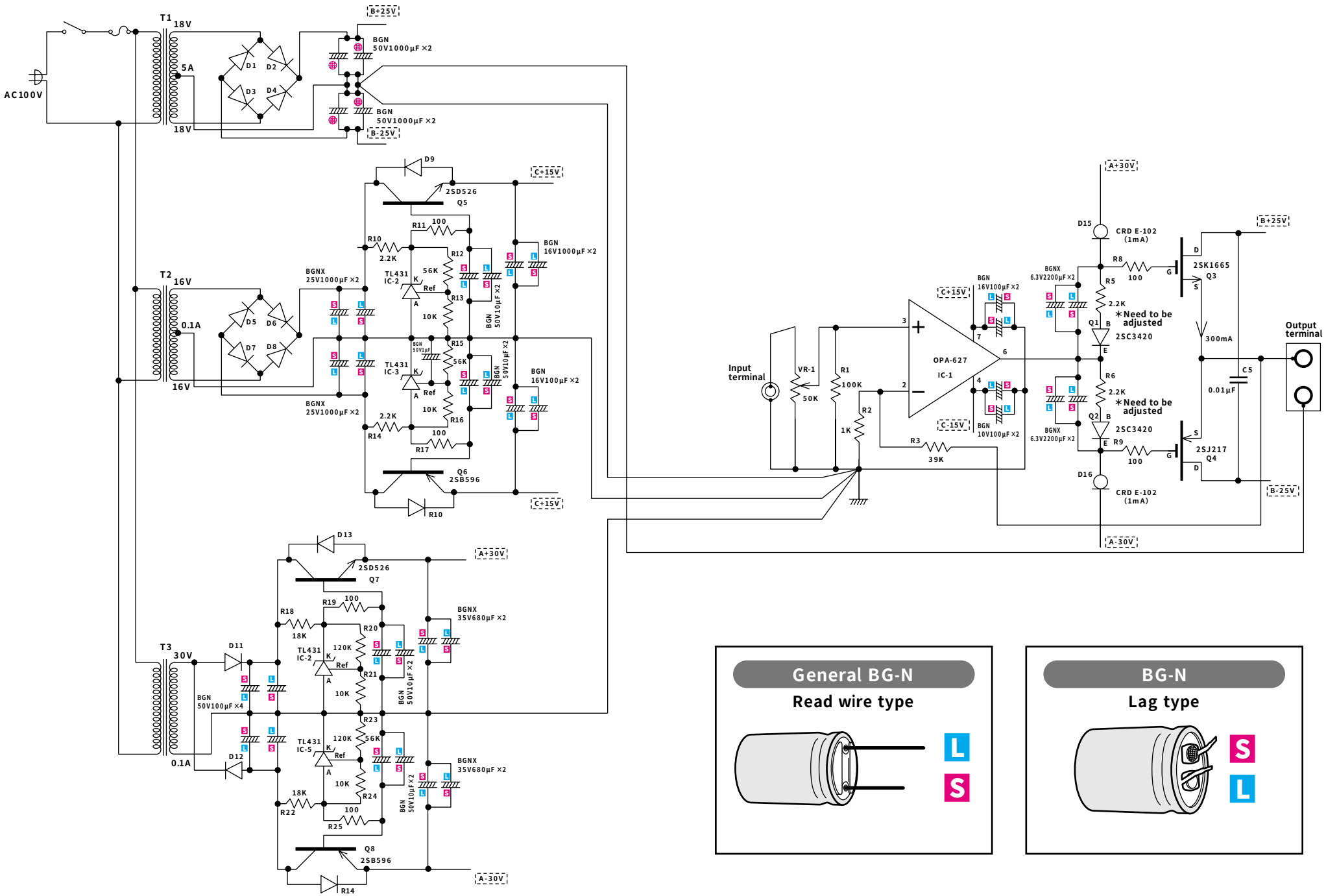
AC100V
T1
18V
5A
18V
D1
D2
D3
D4
B+25V
BGN
50V1000μF ×2
BGN
50V1000μF ×2
B-25V
D9
2SD526
Q5
C+15V
R11
100
R10
2.2K
R12
56K
TL431
IC-2
Ref
R13
10K
BGN
16V1000μF ×2
BGN
50V10μF ×2
T2
16V
0.1A
16V
D5
D6
D7
D8
BGNX
25V1000μF ×2
BGN
50V1μF
R15
56K
TL431
IC-3
Ref
R16
10K
BGN
50V10μF ×2
BGN
16V100μF ×2
BGNX
25V1000μF ×2
2.2K
R14
100
R17
Q6
2SB596
C+15V
R10
D13
2SD526
Q7
A+30V
R19
100
R18
18K
R20
120K
TL431
IC-2
Ref
R21
10K
BGNX
35V680μF ×2
BGN
50V10μF ×2
T3
30V
D11
BGN
50V100μF ×4
0.1A
D12
R23
120K
56K
TL431
IC-5
Ref
R24
10K
BGNX
35V680μF ×2
BGN
50V10μF ×2
18K
R22
100
R25
Q8
2SB596
A-30V
R14
Input
terminal
VR-1
50K
R1
100K
R2
1K
R3
39K
OPA-627
IC-1
C+15V
C-15V
BGN
16V100μF ×2
BGN
10V100μF ×2
A+30V
D15
CRD E-102
(1mA)
R8
100
BGNX
6.3V2200μF ×2
R5
2.2K
Need to be
adjusted
Q1
2SC3420
R6
2.2K
Need to be
adjusted
Q2
2SC3420
BGNX
6.3V2200μF ×2
R9
100
D16
CRD E-102
(1mA)
A-30V
B+25V
2SK1665
Q3
300mA
C5
0.01μF
2SJ217
Q4
B-25V
Output
terminal
General BG-N
Read wire type
L
S
BG-N
Lag type
S
L